Model 80D Multi-Stage Pressure Regulator

Features

- Force balance and pilot control to minimize drift.
- Excellent frequency response to eliminate output pressure excursions.
- Compact size for installation where space is limited.
- Sapphire Orifice provides precise control of air flow through nozzle.
- Low air consumption for efficient operation.
- Available in 1/8”, 1/4” and 3/8” NPT port sizes.

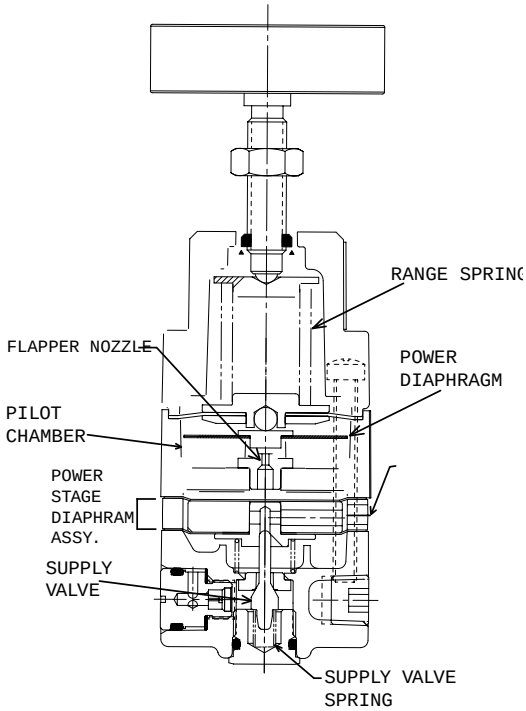

Operating Principles

The Model 80D is a precision two-stage device that incorporates a force balance design with pilot control. This compact, high quality unit combines the flow capacity of a process regulator with the precision of an instrument regulator.

1/8” NPT Regulator

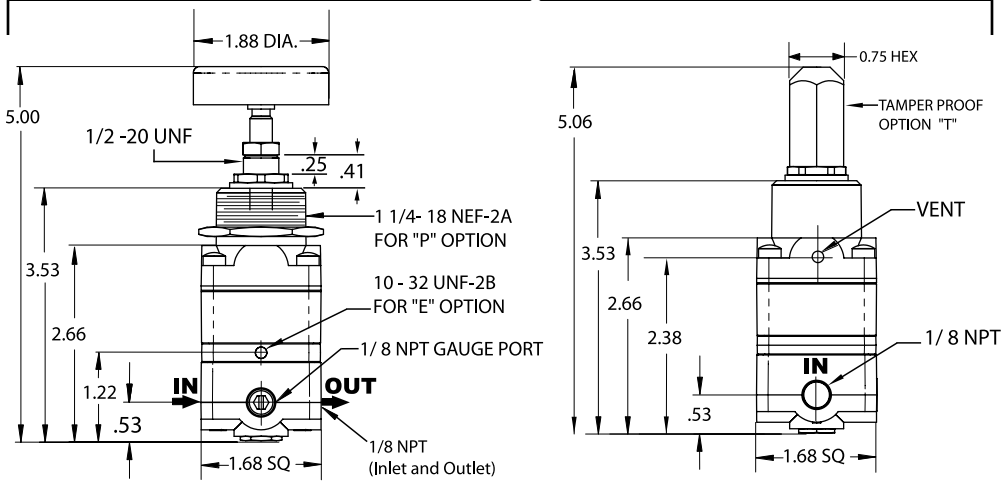

1/4” & 3/8" NPT Regulator

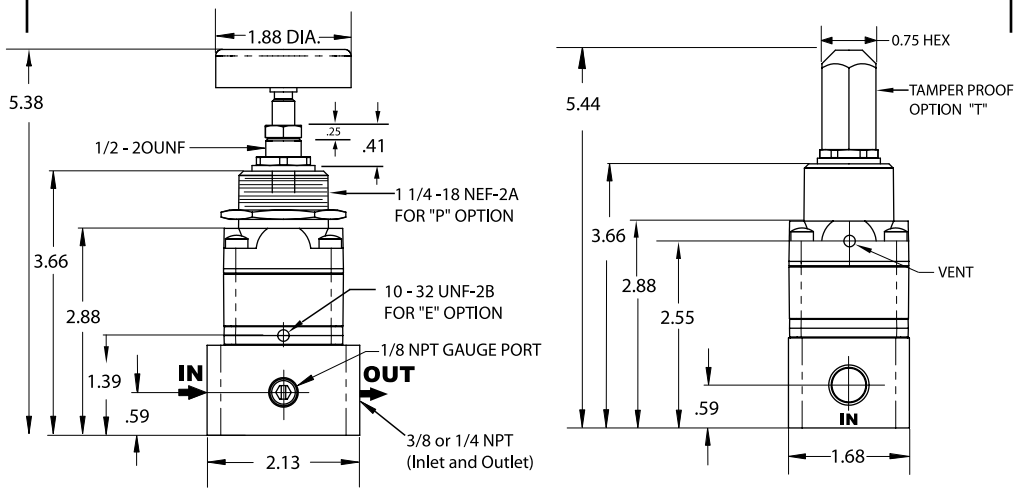

Technical Information

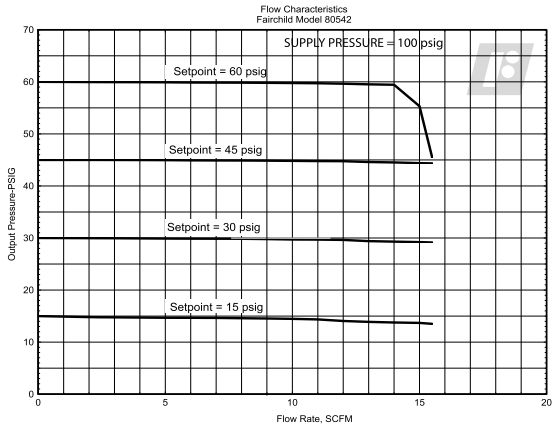

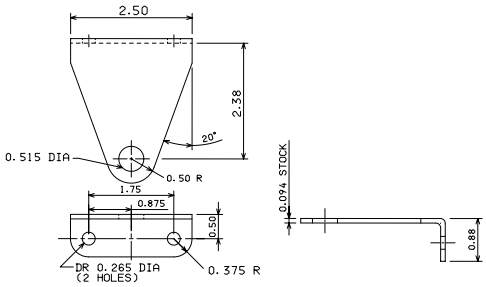

Model 80D Regulator Kits & Accessories

Mounting Bracket Kit .....11989 (sold separately)

Specifications

Flow Capacity
14 SCFM (23.8 m³/HR) (100 psig, [7.0 BAR], (700 kPa) supply: 20 psig, [1.5 BAR], (150 kPa) setpoint)

Exhaust Capacity
2.5 SCFM (4.25 m³/HR) where downstream pressure is 5 psig, [.35 BAR], (35 kPa) above 20 psig setpoint

Pressure Change under Flow Conditions
Less than 0.1 psig, [.007 BAR], (.7 kPa) from dead end service to 10 SCFM (17 m³/HR)

(set pressure 10 psig, [0.7 BAR], (70 kPa) supply pressure 100 psig, [7.0 BAR], (700 kPa)

Air Consumption
Less than .1 SCFM (.17 m³/HR)

Maximum Supply Pressure
150 psig, [10.0 BAR], (1000 kPa) for 20 psig, [1.5 BAR], (150 kPa) range

250 psig, [17.0 BAR], (1700 kPa) for 60 - 100 psig, [4.0 - 7.0 BAR], (400 - 700 kPa) ranges

Effect of Supply Pressure Variation
Less than .2 psig, [.0014 BAR], (1.4 kPa) for 100 psig, [7.0 BAR], (700 kPa) change in supply pressure

Ambient Temperature Limits
-40°F to +200°F, (-40°C to +93.3°C)

Materials of Construction
Trim .....Zinc Plated Steel
Body .....Aluminum
Diaphragms .....Nitrile and Dacron
Orifice .....Sapphire

Catalog Information

Catalog Number 8 0 [ ] [ ] [ ]

Pressure Range

psig	[BAR]	(kPa)	
0-20	[0-1.5]	(0-150)	43[1]
1-60	[0.07-4]	(7-400)	44[1]
1-100	[0.07-7]	(7-700)	45[1]
0-20	[0-1.5]	(0-150)	53[2]
1-60	[0.07-4]	(7-400)	54[2]
1-100	[0.07-7]	(7-700)	55[2]

Pipe Size

1/8" NPT	1
1/4" NPT	2
3/8" NPT	3

Options

Tapped Exhaust	E
Bonnet Mounting	P
Adjustment Screw	S
Tamper Proof	T
BSPT (Tapered)	U

[1] *1/8" NPT Pipe Size Only.*
[2] *1/4" or 3/8" NPT Pipe Size Only.*

Service Information

A service kit is available for the Model 80D. Refer to the *Fairchild Model 80D Pressure Regulator Installation, Operation and Maintenance Instructions,* IS-1000080D.

Tri-State
TECHNICAL SALES CORPORATION
382 Lancaster Avenue • PO Box 4006 • Malvern, PA 19355
Phone: 610-647-5700
Fax: 610-647-3905
E-mail: corp@tristatetech.com
Web: http://www.tristatetechnicalsales.com